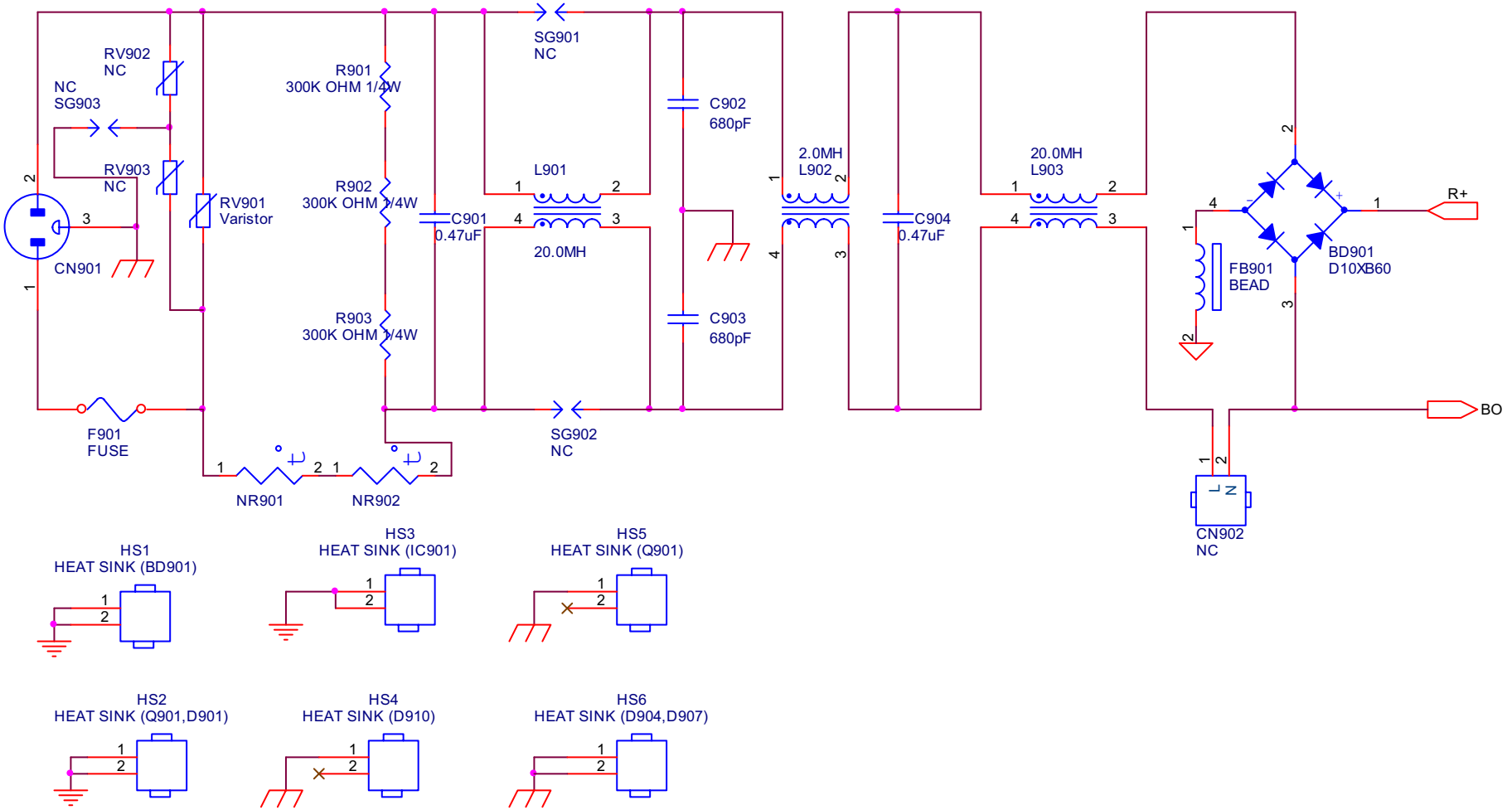
RV902
NC
NC
SG903
RV903
NC
CN901
RV901
Varistor
F901
FUSE
R901
300K OHM 1/4W
R902
300K OHM 1/4W
R903
300K OHM 1/4W
NR901
NR902
C901
0.47uF
SG901
NC
L901
20.0MH
SG902
NC
C902
680pF
C903
680pF
2.0MH
L902
C904
0.47uF
20.0MH
L903
FB901
BEAD
BD901
D10XB60
R+
BO
CN902
NC
HS1
HEAT SINK (BD901)
HS3
HEAT SINK (IC901)
HS5
HEAT SINK (Q901)
HS2
HEAT SINK (Q901,D901)
HS4
HEAT SINK (D910)
HS6
HEAT SINK (D904,D907)

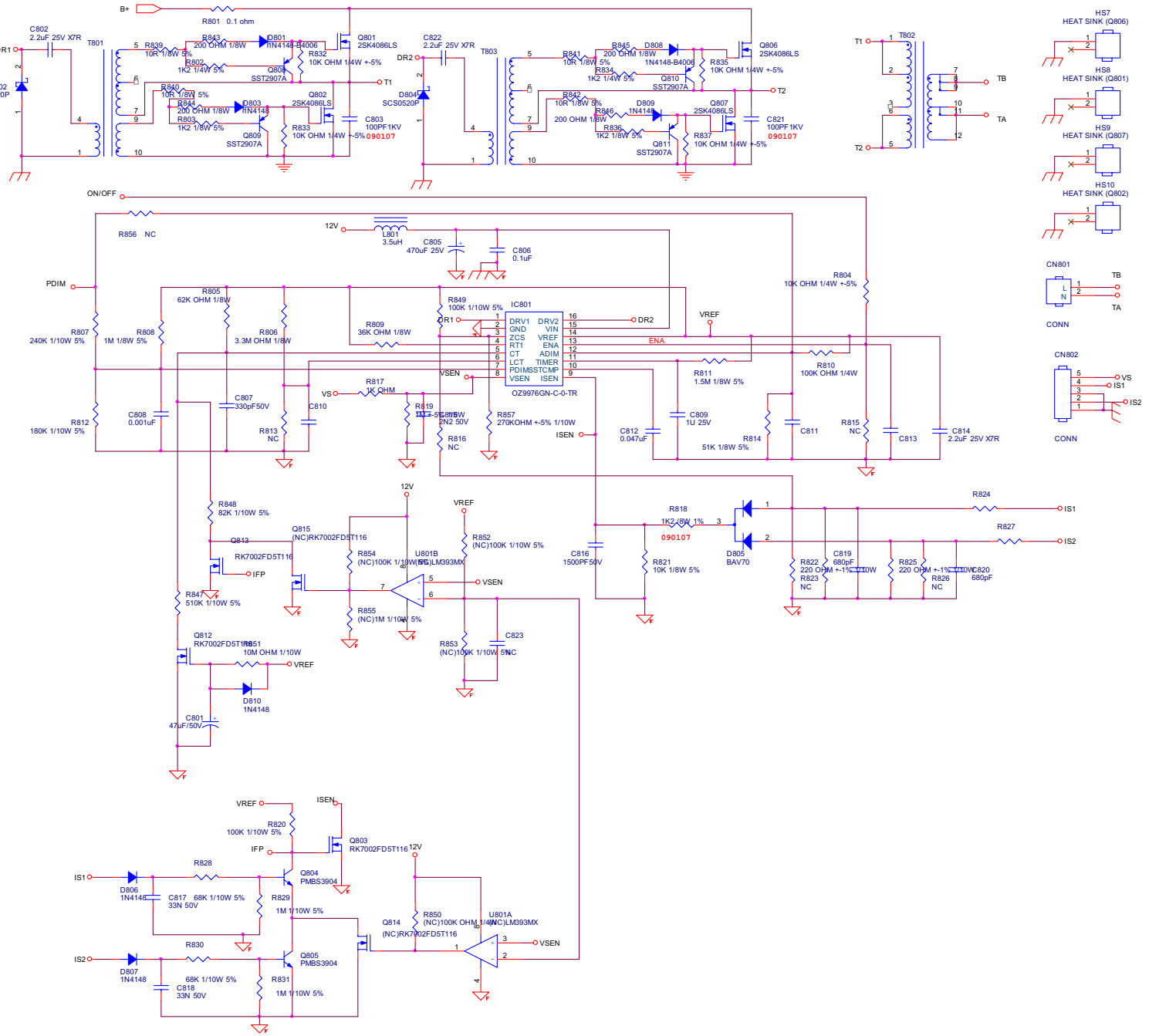
B+
R801 0.1 ohm
C802 2.2uF 25V X7R
DR1
D802 SCS0520P
T801
R839 10R 1/8W 5%
R843 200 OHM 1/8W
D801 1N4148-B4006
Q801 2SK4086LS
R832 10K OHM 1/4W +-5%
R802 1K2 1/4W 5%
Q808 SST2907A
R840 10R 1/8W 5%
R844 200 OHM 1/8W
D803 1N4148
Q802 2SK4086LS
R803 1K2 1/8W 5%
Q809 SST2907A
R833 10K OHM 1/4W +-5%
C803 100PF 1KV
090107
T1
C822 2.2uF 25V X7R
DR2
T803
D804 SCS0520P
R841 10R 1/8W 5%
R845 200 OHM 1/8W
D808 1N4148-B4006
R835 10K OHM 1/4W +-5%
R834 1K2 1/4W 5%
Q810 SST2907A
Q806 2SK4086LS
T2
R842 10R 1/8W 5%
200 OHM 1/8W
R846
D809 1N4148
Q807 2SK4086LS
R836 1K2 1/8W 5%
Q811 SST2907A
R837 10K OHM 1/4W +-5%
C821 100PF 1KV
090107
T1
T802
T2
TB
TA
HS7 HEAT SINK (Q806)
HS8 HEAT SINK (Q801)
HS9 HEAT SINK (Q807)
HS10 HEAT SINK (Q802)
ON/OFF
R856 NC
12V
L801 3.5uH
C805 470uF 25V
C806 0.1uF
PDIM
R805 62K OHM 1/8W
R807 240K 1/10W 5%
R808 1M 1/8W 5%
R806 3.3M OHM 1/8W
R849 100K 1/10W 5%
R809 36K OHM 1/8W
IC801
DRV1 DRV2
GND VIN
ZCS VREF
RT1 ENA
CT ADIM
LCT TIMER
PDIM SSTCMP
VSEN ISEN
OZ9976GN-C-0-TR
DR1
DR2
VREF
ENA
R804 10K OHM 1/4W +-5%
CN801
L
N
TB
TA
CONN
R811 1.5M 1/8W 5%
R810 100K OHM 1/4W
CN802
VS
IS1
IS2
CONN
VSEN
VS
R817 1K OHM
C807 330pF 50V
C808 0.001uF
R812 180K 1/10W 5%
C810
R813 NC
R819
C815 2N2 50V
R816 NC
R857 270KOHM +-5% 1/10W
ISEN
C812 0.047uF
C809 1U 25V
R814 51K 1/8W 5%
C811
R815 NC
C813
C814 2.2uF 25V X7R
R848 82K 1/10W 5%
Q813 RK7002FD5T116
IFP
R847 510K 1/10W 5%
Q815 (NC)RK7002FD5T116
R854 (NC)100K 1/10W 5%
U801B (NC)LM393MX
R855 (NC)1M 1/10W 5%
R852 (NC)100K 1/10W 5%
R853 (NC)100K 1/10W 5%
C823 NC
Q812 RK7002FD5T116
R851 10M OHM 1/10W
D810 1N4148
C801 47uF/50V
R818 1K2 1/8W 1%
090107
C816 1500PF 50V
R821 10K 1/8W 5%
D805 BAV70
R822 220 OHM +-1% 1/10W
R823 NC
C819 680pF
R825 220 OHM +-1% 1/10W
R826 NC
C820 680pF
R824
R827
IS1
IS2
VREF
ISEN
R820 100K 1/10W 5%
IFP
Q803 RK7002FD5T116
IS1
D806 1N4148
C817 33N 50V
R828 68K 1/10W 5%
Q804 PMBS3904
R829 1M 1/10W 5%
R850 (NC)100K OHM 1/4W
U801A (NC)LM393MX
Q814 (NC)RK7002FD5T116
VSEN
IS2
D807 1N4148
R830
C818 33N 50V
68K 1/10W 5%
Q805 PMBS3904
R831 1M 1/10W 5%

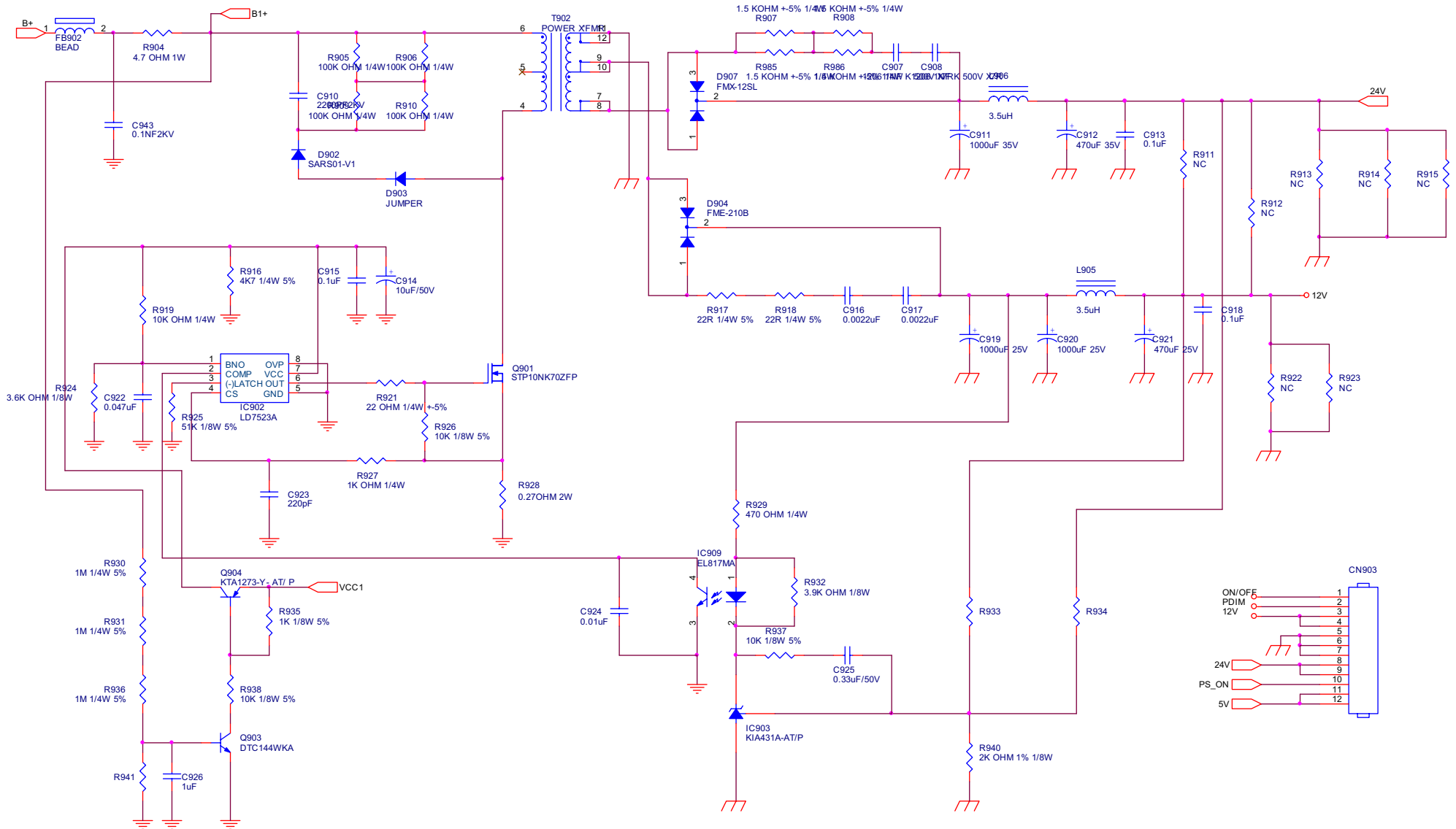
B+
FB902
BEAD
R904
4.7 OHM 1W
B1+
C943
0.1NF2KV
R905
100K OHM 1/4W
R906
100K OHM 1/4W
C910
R910
100K OHM 1/4W
D902
SARS01-V1
D903
JUMPER
T902
POWER XFMR
R907
R908
R985
R986
D907
FMX-12SL
C907
C908
C906
3.5uH
C911
1000uF 35V
C912
470uF 35V
C913
0.1uF
24V
R911
NC
R912
NC
R913
NC
R914
NC
R915
NC
D904
FME-210B
R916
4K7 1/4W 5%
C915
0.1uF
C914
10uF/50V
R919
10K OHM 1/4W
R917
22R 1/4W 5%
R918
22R 1/4W 5%
C916
0.0022uF
C917
0.0022uF
L905
3.5uH
12V
C918
0.1uF
C919
1000uF 25V
C920
1000uF 25V
C921
470uF 25V
R922
NC
R923
NC
R924
3.6K OHM 1/8W
C922
0.047uF
R925
51K 1/8W 5%
BNO
COMP
(-)LATCH
CS
OVP
VCC
OUT
GND
IC902
LD7523A
R921
22 OHM 1/4W +-5%
Q901
STP10NK70ZFP
R926
10K 1/8W 5%
R927
1K OHM 1/4W
C923
220pF
R928
0.27OHM 2W
R929
470 OHM 1/4W
IC909
EL817MA
R932
3.9K OHM 1/8W
R937
10K 1/8W 5%
C925
0.33uF/50V
C924
0.01uF
IC903
KIA431A-AT/P
R933
R934
R940
2K OHM 1% 1/8W
R930
1M 1/4W 5%
Q904
KTA1273-Y- AT/ P
VCC1
R935
1K 1/8W 5%
R931
1M 1/4W 5%
R936
1M 1/4W 5%
R938
10K 1/8W 5%
Q903
DTC144WKA
R941
C926
1uF
CN903
ON/OFF
PDIM
12V
24V
PS_ON
5V